RIGGING A LOAD

HOW TO GET HITCHED.

This section applies to rigging a load, regardless if it is for a crane, boom truck, or lifting a load with a piece of equipment. The following principles should apply to any load that is being rigged.

Rigging is used to connect loads to the hook of a crane. Slings, hardware, bars, and positioning devices are just a few examples under hook lifting devices (rigging).

Rigging a load might be as simple as attaching a single sling to an object with a choker hitch or it can be very complex. The weight of the object, size, shape, and center of gravity will have an effect on the rigging required to safely hoist the load.

QUALIFIED RIGGERS

- The rigger shall be qualified in the fundamentals of rigging. This qualification shall include training on at least the following subjects; basic rigging plan, inspection of hardware, inspection of slings, the rigging triangle, application of hardware, application of slings, and load control basics, at a minimum. For employee-owners, this can be accomplished through a third party, similar to the Crosby Group Inc. training, or a Company-qualified evaluator. For employee-owners the training should include a verbal or written test and a practical exam; a record of said successful training completion shall be kept on file by the employer.
- All rigging shall be inspected each shift before use.

- The rigger who rigs the load shall inspect the load once the rigging has been tightened to ensure the load is stable and there are no loose parts being flown.
- Taglines shall be used to control loads. The qualified rigger may make an exception to this rule in specific cases where the qualified rigger determines that a tag line will create a hazard. It is important to review each load and the length of the tagline.
- Synthetic slings/rigging should only be used when there is no danger of sharp edges, on the load to be hoisted, or cutting the material. If there are sharp edges, corner softeners can be used as directed by the manufacturer or another type of rigging can be utilized that is resistant to cutting.
- Due to the inspection requirements for chain slings, they should not be used unless their specific use has been reviewed and agreed to by the Safety Manager.
- It is important that rigging and rigging hardware be of the highest quality and meets all applicable safety standards. For these reasons, slings shall have manufacturer's identification that is legible, if it does not it shall be taken out of service and destroyed or inspected by a certified party and re-tagged. Identification should include, at a minimum, loading rating and/or size, manufacturer's name, and some means of traceability.
- Rigging hardware, shackles, eye hooks, turnbuckles, and eyebolts shall have identification including the manufacturer's load rating and/or size. If the hardware does not have this forged into the component the project must have the manufacturer's load chart that shows working load limits.
- Rigging hardware should be "heat treated". Non-heat-treated products will fail with little or no warning, a catastrophic failure, because of their brittleness. Rigging hardware from Crosby Group Inc., or equal, shall be used to insure quality "heat treated" rigging hardware.
- When not in use, rigging and rigging hardware shall be stored to protect it from damage.

GENERAL REQUIREMENTS

At all times, rigging is to be used within the Safe Working Load Limit (SWLL) or Working Load Limit (WLL) of the device. Most rigging devices clearly display the WLL for the device. However, some hardware used in multiple rigging configurations will not display the capacity. These capacities can be found if the manufacturers will not display the capacity. These capacities can be found in the manufacturer's catalog by specific part number. An example of this master link used on multi-legged slings does not display the capacity. The same master link may be used for several different sizes of wire rope slings where the capacity of the configuration is limited by the strength of the wire rope and not the master link. Since the master link has a higher capacity than the wire rope, it would be confusing to display the capacity of the master link and the configuration.

In general, rigging is required to have a design factor of 5:1. This means that the ultimate breaking strength of the device is five times greater than the WLL stated on the device. This does not suggest that rigging can be overloaded. Never Exceed the WLL of rigging devices.

NEVER EXCEED "WLL" OF RIGGING DEVICES NEVER. EVER. EVA.

Most rigging hardware is designed so that there is a warning before a failure occurs. The hardware is designed to stretch out of shape before ultimate failure. If hardware has signs of deformation, it is an indication that it has been overloaded. Do not use deformed hardware.

Slings - all rules and regulations regarding slings used in rigging can be found under ANSI/ASME B30.9

Hardware - all rules and regulations regarding hardware can be found under ANSI/ASME B30.26 Rigging Hardware or B30.10 Hooks.

PURCHASING RIGGING

When purchasing rigging, it is necessary to do business with a reputable supply source. The Company has committed to only using rigging made in either the USA or Canada.

Some rigging such as wire rope slings can be difficult to verify the origin of the wire rope. If you have questions, please contact the Safety Manager.

SLINGS

Wire Rope Slings

There are many types of slings available for use in rigging loads. Wire rope slings are the most common because of their strength, durability, abrasion resistance, and ability to conform to the shape of the load. For most lifting operations, wire rope should be the first consideration when selecting a sling. Cost and durability alone make the wire rope sling the most economical sling available.

Storage

Wire rope slings when not in use should be stored in a location that will protect them from being damaged by equipment, exposure to heat, standing water, or mud. It is recommended that these slings be stored on a rack that keeps them off the ground and does not require that they be rolled up. Rolling up wire rope slings causes stored energy in the sling that can cause injuries when unrolled.

Inspection

ANSI/ASME B30.9 require slings to be inspected as follows:

- Initial Inspection - upon purchase and before use.
- Frequent - Before each day use.
- Periodic - Not to exceed one year. Should be documented.

All three of these inspections are essentially the same. If any of the conditions below are noted during any of these inspections, the sling must be removed from service.

If a nonrepairable condition exists, the sling should be destroyed by cutting the eyes of the sling making it impossible for the sling to be used.

If the sling is in good condition and only the capacity tag is missing or illegible, the sling can be re-tagged by the manufacturer and returned to service.

Since most wire rope slings don't have an identifying number, documentation of the periodic inspection is difficult. The use of colored tape can serve as documentation of the inspection.

Some replacement criteria for wire rope slings include:

- 10 randomly distributed broken wires in one rope lay
- 5 broken wires in one strand in one rope lay
- Kinking
- Birdcaging
- Crushing
- Damage to rope structure
- Evidence of heat damage
- Corrosion
- Missing or illegible sling identification

Do not confuse the replacement criteria for wire rope slings with the replacement criteria for running ropes on cranes. To eliminate confusion, contact your Safety Manager if you have questions.

Synthetic Slings

Synthetic and nylon slings come in many different forms. These slings are popular because of their lightweight, high-strength characteristics. Compared to wire rope slings, synthetic and nylon slings of equal capacity weigh several times less than wire rope slings. Another characteristic is that stored energy is not an issue with synthetic slings.

Synthetic or nylon slings on the other hand have characteristics that are detrimental to their use. The initial cost of purchase can be as much as three times the cost of a wire rope sling. Because of their composition, these slings are very susceptible to damage from cutting, burning, snagging, chemical deterioration, and the effects of ultraviolet rays from the sun. They are also very prone to wear when used in day-to-day rigging.

Synthetic or nylon slings must not be used to rig around sharp corners. It is also important that the load cannot slide through these types of slings. This action can either cut or burn the sling and cause the load to fall. It is always a good practice to use “softeners” when using synthetic or nylon slings.

As with all slings, synthetic round slings and web slings must be clearly tagged with capacities. The WLL tag must be maintained for the life of the sling.

Web Slings

Web slings offer good protection for machine parts, are nonconductive (when dry), lightweight and flexible. The sling is usually made of nylon or polyester, however other materials are available.

The different materials have their own characteristics for resistance to damage from various liquids. For instance, polyester can be used in acidic conditions where nylon cannot. Both materials can be used in temperatures up to 200 degrees F.

Web slings are made by sewing layers of nylon webbing together. Although most web slings look similar, they can vary in capacity for several reasons. Be aware that double-ply slings may not have double the capacity of a single-ply sling.

> **ALWAYS REFER TO THE SLING WLL TAG FOR RATED CAPACITIES.**
> If the tag is missing or cannot be read, do not use the sling.

EXHIBIT 3.E.001

Acceptable Types of Web Slings

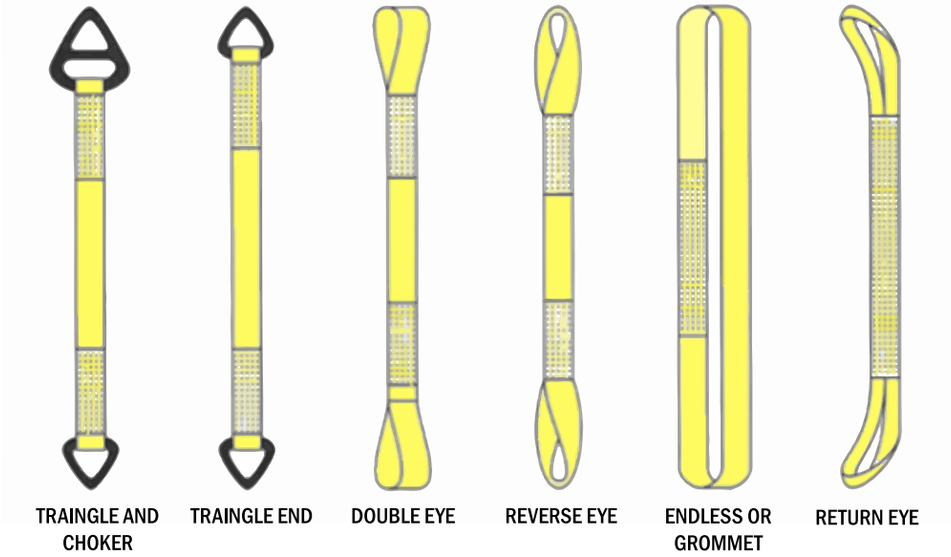

Web slings require special hardware. If the shape of the hardware is round as it is with a normal shackle, the eye of the sling will conform to the round shape. This can cause uneven loading across the eye of the sling. The edges of the sling will take more load than the middle of the sling. This can cause the sling to fail. Make sure the full width of the sling body or eye is equally loaded at all times. If a shackle pin does not have enough room for the sling to lay flat on the pin between the bow, do not use a web sling. This would cause the sling to be bunched or pinched in the shackle. Bunching and pinching can cause the sling to be overloaded and can ultimately cause failure. Special shackles are available for use with web slings. These shackles are called sling savers and can be used with any web sling.

EXHIBIT 3.E.002

Unacceptable Types of Web Sling Saver Shackles

EXHIBIT 3.E.003

Acceptable Types of Web Sling Saver Shackles

Do not use hardware that is not specifically designed to be used with web slings. This hardware is also recommended for synthetic round slings. The flat surfaces on this type of hardware allow the sling to lie properly without bunching and pinching.

Some replacement criteria for nylon web slings include:

- Holes, tears, cuts, abrasive wear, or snags
- Acid or caustic burns
- Melting or charring of any part of the sling
- Knots
- Broken or worn stitching in load-bearing splices
- Discoloration and stiff or brittle areas may mean chemical damage or ultraviolet/sunlight damage
- Any fitting that is damaged, pitted, gouged, bent, twisted, or broken
- Missing or illegible sling identification

Some webbing manufacturers may include red threads within the inner layer of webbing material that runs longitudinally along the webbing. These webbing manufacturers recommend that if these red threads are exposed; the sling must be removed from service even though this is not part of the ANSI/ASME requirements for replacement. This is not to say that you should use a sling that is cut on the edge if the red thread is not showing.

Synthetic Endless Round Slings

Synthetic endless round slings are the most forgiving of the lightweight slings. These slings are constructed of load-carrying fibers covered with a tough non-load carrying cover. The load-carrying fibers or yarns are wrapped around two points for a specific length and then covered. The number of wraps and the size of the yarn is dependent on the capacity desired. The cover is sewn together to completely encompass the yarn. A second sleeve is applied to the sling to protect the inner cover or sleeve.

These slings can be made in very high capacity configurations making them an attractive choice where large slings are needed. Their weights are a fraction of wire rope slings of equal capacity.

Since there are so many manufacturers making these slings, the color of the cover cannot be relied upon to determine the capacity.

Always refer to the individual slings WLL capacity tag to determine capacity.

EXHIBIT 3.E.004

Synthetic Endless Round Slings

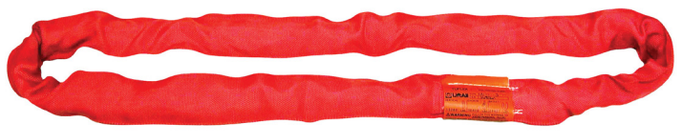

Storage

With all synthetic type slings, storage practices are key to the longevity of the sling. Since these slings are more fragile and more expensive than wire rope slings, it is important that they are kept in a dry location out of sunlight to protect the slings from the elements.

Inspection

Synthetic and nylon slings fall under the ANSI/ASME B30.9 criteria the same as wire rope slings for frequency of inspection.

- Initial Inspection - upon purchase and before use
- Frequent - Before use each day
- Periodic - Not to exceed one year. Should be documented

Some replacement criteria for synthetic round slings include:

- Holes, tears, cuts, abrasive wear, or snags that expose the core yarns
- Acid or Caustic burns
- Broken or damaged core yarns
- Knots
- Welding splatter
- Discoloration and stiff or brittle areas may mean chemical damage or ultraviolet/sunlight damage
- Evidence of heat damage
- Any fitting that is damaged, pitted, gouged, bent, twisted, or broken

- Missing or illegible sling identification (WLL)

If you have any questions, please contact your Safety Manager.

Chain Slings

Chain slings should be purchased from the United States or Canada only. Grade 100 chains can be used for lifting, but rigging should comply with the WLL identification tag on the chains.

Hardware

Rigging hardware devices are too numerous to mention. Some of the most common are shackles, eye bolts, hooks, master links, and turnbuckles. Regulations regarding hardware can be found in the ANSI/ASME B30.26 Rigging Hardware or B30.10 Hooks.

It is important that the proper hardware is selected and inspected before use in rigging a load. Each item must have the WLL displayed. The Company requires all hardware to be purchased in the United States or Canada. Hardware from any other country should be discarded. All hardware suspected to not pass inspection should not be used for rigging.

Inspection

Hardware is to be inspected each day before use by a Competent Person. If the hardware does not pass the inspection, it is to be taken out of service immediately. Do not use deficient rigging. If the rigging cannot be put back into acceptable condition, the hardware is to be destroyed and discarded. Do not allow employee-owners to remove defective or deficient rigging from the job for their personal use.

Unless the hardware is brand new, do not paint. Painting hardware can hide cracks and can make it difficult to detect deficiencies. All new hardware should be inspected before it is used.

Some replacement criteria for hardware include:

- Must have legible identification
- Remove from service if any significant deformation
- Excessive wear

- More than 5% wear in critical areas such as eyes or throats of hooks or other critical areas of hardware
- More than 10% wear in noncritical areas
- Remove from service if cracks, nicks, or gouges are detected
- Remove from service if the hardware has been modified or parts substituted
- Evidence of heating or bending or welding
- Remove if the hardware does not function properly.
- The pin will not screw in 100%
- The safety latch does not work
- The swivel does not work

WIRE ROPE CLIPS

Wire rope clips are used for making an eye or attaching two pieces of wire rope together. For crane and rigging operations, wire rope clips are to be used only where wire rope is terminated in a wedge socket. Follow the manufacturer's guidelines when using wire rope clips at wedge sockets.

Wire rope clips are not to be used to make slings used for lifting.

Wire rope clips can be used for guy wires or temporary handrails or for static lines in engineered fall protection systems.

EXHIBIT 3.E.005

Shackles

There are three basic types of shackles:

ROUND PIN SHACKLE

Do **NOT** side load (straight pull only). Do not use as a collector ring. Always use cotter pin.

SCREW PIN SHACKLE

Use when lifting and placing a load. Always tighten pin. Can be used in most locations.

BOLT TYPE SHACKLE

Use in permanent and long term locations. Always use nut and cotter pin.

Round pin shackles should not be used for rigging. These shackles have a smooth pin that is secured only with a cotter key. Because of the lack of a secure pin, the shackle relies solely on the strength of the bow to resist opening at the pin location. These shackles are to be used only for straight pull with one sling on the bow pulling 90 degrees to the pin.

Screw pin shackles are the most common shackles used in the industry today. This shackle uses a threaded pin that screws into the bow of the shackle. The pin has a shoulder that when properly tightened, secures the pin and helps the bow resist spreading under load. The shackle can be used on hooks, lifting lugs, sling to sling, shackle to shackle, or just about any combination.

The shackle pin can be wired (mouse) to the bow if necessary for pin security. The shackle pin should be screwed into the bow until the shoulder contacts the bow and then back off ¼ turn. This is done so the pin will be easily removed from the shackle after the lift is completed. It is recommended by the manufacturers that the pin be screwed in until the shoulder makes contact with the bow and left in that position. This will ensure the security of the pin and also strengthen the bow as discussed earlier.

Bolt type shackles use the same bow as the round pin shackle (smooth bores) but use a bolt type pin. The pin is threaded on the end to allow a nut to be installed. The pin has a hole drilled at the end of the threads where a cotter key is inserted to keep the nut from unscrewing. Typically the bolt type shackle is used where removal is rare or where vibration is a concern and pin security is important. Since the pin can turn in the bow even after the nut and cotter pin are installed, vibration has little effect on pin security.

This shackle can be used anywhere the screw pin shackle can be used. The bolt type shackle is the only type of shackle that can be used when hoisting personnel from a crane. This is because of the security of the pin.

Uses

Shackle uses are wide-ranging. Using a shackle on a choker hitch with any sling is a good practice. The D to d ratio between the shackle and sling can be increased and the sling will not wear as rapidly because of the smoothness of the shackle. It is critical that when using a shackle to form a choker hitch the pin goes through the eye of the sling. This keeps the pin from unscrewing when the body of the sling is pulled.

EXHIBIT 3.E.006

Never Allow Screw Pin to be Rotated by Sling Action

EXHIBIT 3.E.007

Never Side Load A Round Pin Shackle

ANGLE OF SIDELOAD	LOSS OF W.L.L.
NONE, IN LINE	NONE
45°	30° LOSS
90°	50° LOSS

Sizing shackles

Shackles are not designed to be used when sling angles are less than 30 degrees. When sizing shackles for lifting, the shackles attached to the load must have enough WLL to withstand the tension in the slings. The shackle that connects the slings to the crane must be capable of lifting the weight of the load. In this example, because of the sling angle, all shackles must have a WLL of 5 tons minimum. The shackle at the top used to collect the slings must be physically large enough to accommodate the slings without stacking. It also must be large enough to fit the hook. When a shackle is used to collect more than one sling, the slings go on the bow of the shackle and not the pin. When a single sling is placed in a shackle, orientate the shackle to best fit and align the rigging.

EXHIBIT 3.E.008

Correct Shackle Sizing Examples

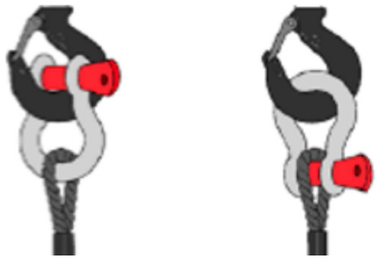

When only using one sling, orientate it for best fit.

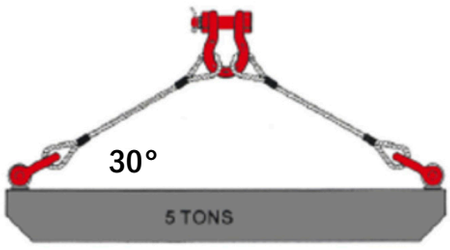

Sling angles must be 30 degrees or greater.

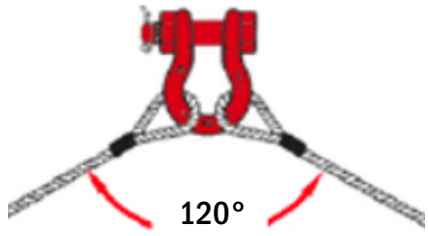

Maximum 120 degree angle for shackles.

HOOKS

EXHIBIT 3.E.009

Hook Types

Eye hooks are a very common type of hook. There are many variations of the eye hook used in the rigging as well as on some load blocks and headache balls. When used on slings make sure the slings have thimbles in the eyes to increase the D to d ratio between the eye of the hook and the eye of the sling. Using shackles through the eye is an acceptable practice making this a versatile device.

Swivel hooks allow the hook to turn independently from the eye. These hooks can be used anywhere but are found on blocks and balls or other lifting devices where

the limited turning of the hook occurs.

Shank hooks are used primarily in load blocks. These hooks range from one ton to 300 ton capacity for single hooks. Duplex hooks range in size from 25 tons to 600 tons. The shank of the hook can be machined for bearings and threaded for installation in a load block.

Hooks, because of their construction rely solely on the strength of the material for bending resistance. There are no pins or bolts to help the hook keep its shape.

Tip loading, side loading, or excessively low sling angles can cause the hook to deform. Usually, when a hook is deformed, the first thing noticed is the safety latch does not function properly. If the safety latch is not damaged but does not function properly, you should suspect the hook is deformed or damaged. Sling angle in hooks is critical to safety. Sling angles below 45 degrees are not permitted in a hook. When low sling angles are used, the hook can be deformed. Also when low sling angles are used, it is possible that a sling could ride up the tip and come off the hook. The safety latch will prevent unloaded slings from coming off the hook but loaded slings will go through the latch.

EXHIBIT 3.E.010

Hook Sling Angle

Sling angle in hooks is critical to safety. Sling angles below 45 degrees are not permitted in the hook.

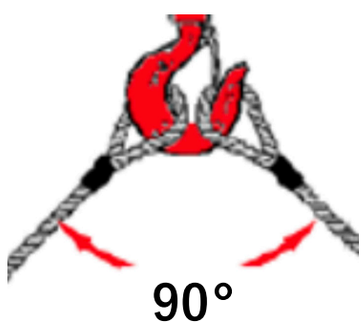

Inspection

The inspection criterion for a hook is the same as for other hardware. Deformation of the hook is a primary concern however; nicks, gouges, and wear are also causes for replacement.

Critical areas are shaded. No more than 5% wear is allowed in the red area. No more than 10% in grey areas. Wear on the tip of the hook is not critical to the strength of the hook.

EXHIBIT 3.E.011

Hook Inspection and Out-Of-Service Criteria

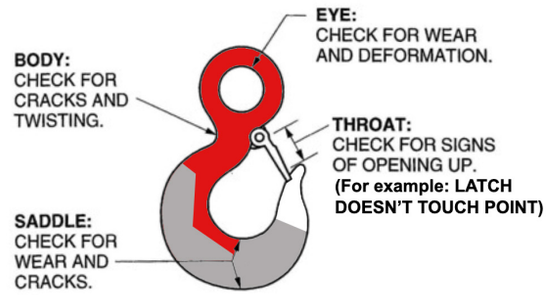

MASTER LINKS (D-RINGS)

Master links are for the most part an underutilized rigging device. The most common use of the master link is to collect the slings in multi-leg sling assemblies. The master link comes in many shapes and sizes. The oval, round, and pear shapes can be used in many applications where size matters.

EXHIBIT 3.E.012

Master Link Shapes

OVAL ROUND PEAR

The master link can be used on large hooks in place of large shackles. For example, you might use a 55-ton shackle because it will fit the hook of the load block on the crane. The 55-ton shackle weight is 86 pounds. A comparable capacity master link weighs about 37 pounds and dimensionally will easily fit the same hook. Usually, when a large shackle is used on a hook it is selected for the dimensions and not the capacity.

EYE BOLTS

Eye bolts are often used to provide attachment points for rigging.

EXHIBIT 3.E.013

Eye Bolt Types

There are three basic types of eye bolts

REGULAR NUT

SHOULDERED

MACHINERY

When lifting with Eye Bolts

- Only eye bolts with WLL should be used. Basic eye bolts bought at store do not meet lifitng criteria.
- Always lift the load with a steady, even pull - do not jerk.
- Always apply a load to the eye in the plane of the eye - not an angel.
- If lifting at an angle, the capacity of the eye bolt must be reduced.
- Only eye bolts with shoulders can be pulled at an angle.

EXHIBIT 3.E.014

Lifting at an Angle

The capacity of the eye bolt is reduced when lifting at an angle

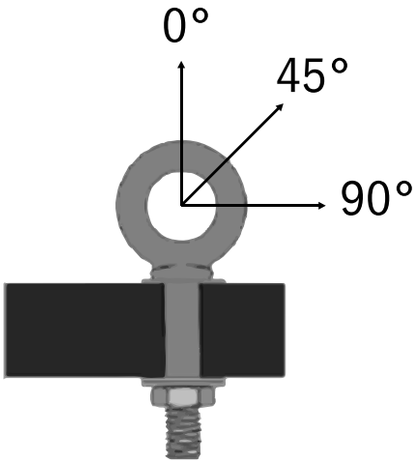

DIRECTION OF PULL (IN LINE)	ADJUSTED WORKING LOAD LIMIT
45°	30% OF RATED W.L.L.
90°	25% OF RATED W.L.L.

EXHIBIT 3.E.015

Hex Nut Positioning

CORRECT

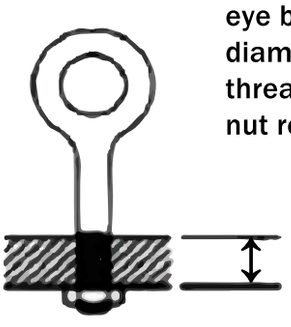

More than one eye bolt diameter of threads, only 1 nut required

Tighten hex nut securely against load

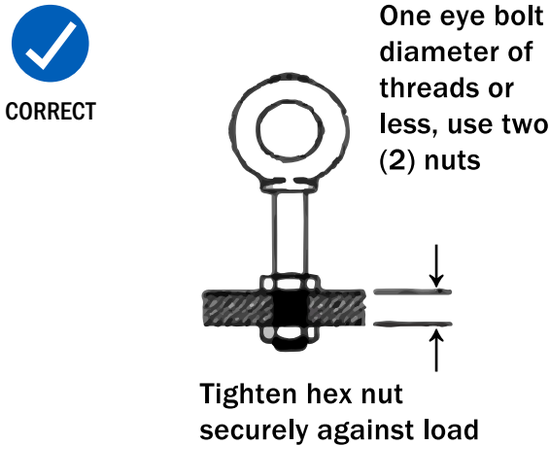

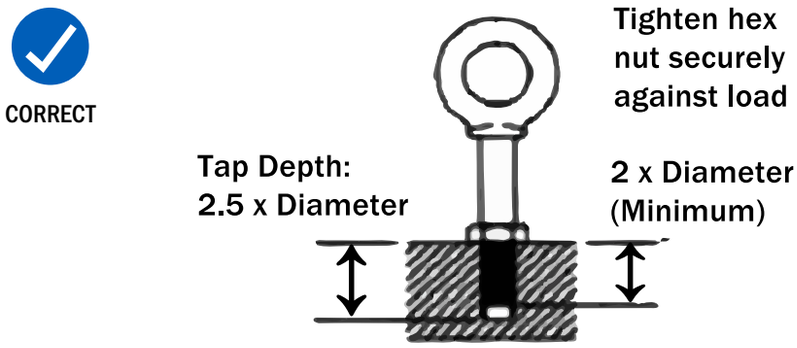

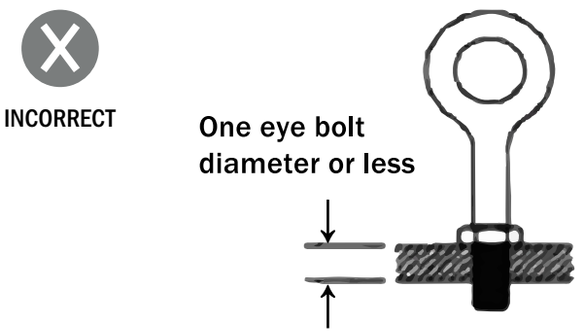

TURNBUCKLES

Turnbuckles are used for positioning. Turnbuckles can be used in line or straight pull only. If used where vibration is a concern, use either a lock nut to lock the body to the bolt or mouse the body to the end fitting. Turnbuckle capacities are available in the manufacturer's catalog. Be sure the end fittings match the drawings in the catalog as this is typically the limited factor for capacity. For instance, a turnbuckle with a hook and hook configuration has less capacity than an equal size and stroke turnbuckle with an eye and eye configuration.

EXHIBIT 3.E.016

Types of Turnbuckles

HOOK & HOOK

HOOK & EYE

EYE & EYE

JAW & EYE

JAW & JAW

SPREADER BAR/LIFTING BEAMS

Spreader bars and lifting beams are regulated by ANSI B30.20 Under the Hook Lifting Devices. Spreader bars are used to lift long hard to handle loads. The spreader bar can allow slings to lift in a vertical position reducing or eliminating the effects of the rigging triangle. This is very important for loads that have limited structural capacities and where bending or damage could occur if rigged with sling angles. Typically the spreader bar uses attachment points located on the ends of the beam. Above the bar, the rigging usually forms a triangle. Below the bar, the slings can be vertical or at an angle.

EXHIBIT 3.E.017

Spreader Bar

SPREADER BAR

Lifting beams are used for the same reason as a spreader bar. Lifting beams have several attachment point options for attaching the beam to the load. Lifting beams may have one or more attachment points for attaching the beam to the crane. These characteristics make the lifting beam a versatile lifting device.

EXHIBIT 3.E.018

Lifting Bar

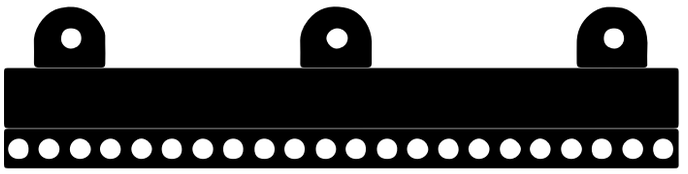

LIFTING BAR

Equalizers are much the same as lifting beams. Equalizers are used to equalize that each sling lifts below the bar. The equalizer can be used in either position. When an equalizer is used by a single crane, the crane attaches to the single pad eye on the beam and the load is attached to the dual pad eyes on the bottom. This allows the beam to equalize the loading on the bottom pad eyes.

For two crane lifts the equalizer is inverted and the cranes attach to the bar on the dual pad eye side. The load is attached to the single pad eye ensuring that each crane lifts only half the load.

For an equalizer to work properly, the dual pad eyes must be the same dimension as the single pad eye.

EXHIBIT 3.E.019

Equalizer

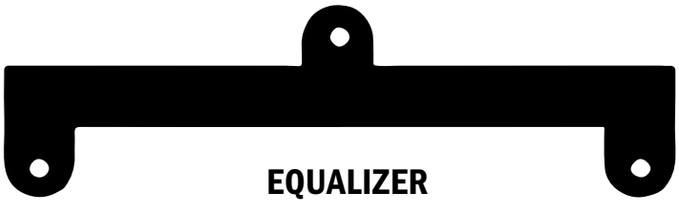

EQUALIZER

EXHIBIT 3.E.020

Dual Crane Position

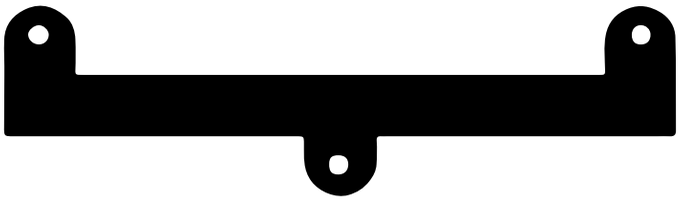

DUAL CRANE POSITION

Another form of an equalizer is the triangle plate. The triangle plate uses the same concept as the equalizer bar and can be used in either position. Since not all slings are exactly the same length, a triangle plate can ensure that each sling is equally loaded by pivoting to equalize the loading when lifted.

For equalizers to be effective, only one sling should be used at each eye location. They are most effective when more than three slings are used in a lift.

In all cases, lifting beams, spreader bars and equalizers must be designed by a qualified engineer, built by a qualified fabricator and load tested.

The load rating for a device should not be more than 80% of the maximum load sustained during the load test. Test loads shall not be more than 125% of the rated capacity unless otherwise recommended by the manufacturer.

Marking Identification

All lifting bars and beams must have identification on the bar. The following is required:

- Manufacturer's name and address
- Serial Number
- Weight if over 100 pounds

- Rated Load (capacity)
- ASME BTH-1 Design Class
- ASME BTH-1 Service Class

Warning labels for the operation of the device will be in place as well. Warn the operator of the dangers of overload, using damaged devices, lifting suspended loads over other people, etc.

Inspection

On all new lifting bars and beams, an initial inspection should be performed to verify that compliance with all applicable provisions of ANSI B30.20.

There are three basic intervals for inspection.

01 Every lift inspection
02 Frequent inspection
03 Periodic inspections

All "job-made lifting devices" must meet the design and testing requirements of ANSI B30.20. The documentation must be readily available upon request. Copies should also be on file in the Safety Department.

General Rigging Inspection

Inspection of rigging is a key element of a safe lift. All inspection criteria set forth by manufacturers or other regulatory agencies are the minimum requirements for rigging devices. If a rigging device exceeds any criteria, the WLL of the device is not valid. Daily inspections of rigging devices prior to use are a core responsibility of the rigger.

RIGGING TRIANGLE

Understanding the rigging triangle and how it affects the loads in rigging is a vital yet often ignored or misunderstood part of the rigger's responsibilities. Attaching more than one sling to a load and forming a triangle with the slings causes the weight of the load to be multiplied. The mechanical forces induced into the slings must be accounted for the same as the load when sizing rigging.

There are three basic factors that affect the load on each leg of the rigging.

01 Weight of the load - The weight of the load is the most important factor regarding lifting operations. It is vital that the weight of the load is known as close as possible to any hoisting of the load. Whatever method is used for determining the weight, must be accurate.

02 Center of Gravity - The location of the center of gravity (COG) in relation to the lifting points must be known before the share of the load can be determined. The share of the load is the amount of weight of the given object each leg of the rigging will lift. For example, a load has two attachment points and weighs 1,000 pounds. The attachment points are equally spaced from the COG. Each leg will lift 500 pounds.

If a load is non-symmetrical and the center of gravity is located closer to one attachment point than another, the leg attached closer to the COG will lift more weight than the other leg.

03 Angle (3) of the slings - Finally the angle of the slings will have a profound effect on the tension in each leg. The tension can be easily calculated by dividing the length of the rigging by the height of the rigging. The answer is known as the Load Angle Factor.

EXHIBIT 3.E.021

Load Angle Factor

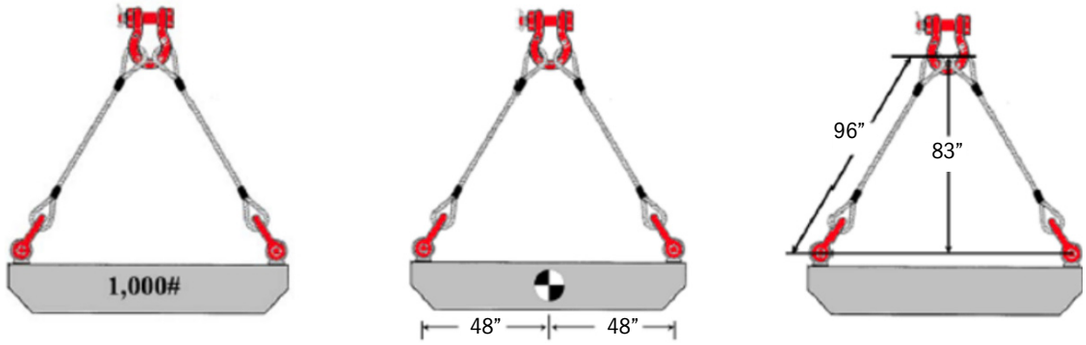

In the above examples, the weight of the load is 1,000.
Each attachment point is equally spaced (48”) around the COG. The rigging length is 96” and the rigging height is 83”.

Since the load is rigged equally around the COG, each leg will lift an equal share of the load of 500 pounds.

EXHIBIT 3.D.022
This chart represents the different load angle factor associated with the sling angle in the above example.

SLING ANGLE	LOAD ANGLE FACTOR
90 °	1.000
85 °	1.004
80 °	1.015
75 °	1.035
70 °	1.064
65 °	1.104
60 °	1.155
55 °	1.221
50 °	1.305
45 °	1.414
40 °	1.555
35 °	1.742
30 °	2.000
25 °	2.364
20 °	2.924
15 °	3.861
10 °	5.747
5 °	11.490

The load angle factor is determined by dividing the length of the rigging by the height.

96”/ 83” = 1.157

500 lbs. x 1.157 = 578.5 lbs.

Each leg of the rigging will feel 578.5 pounds of tension when the load is lifted. Tension must be accounted for the same as weight.

The slings and the shackles attached to the load must have a WLL sufficient to lift 578.5 pounds. The shackle at the top of the triangle must have a WLL to lift 1,000 pounds. The additional tension in the slings does not affect the top shackle.

If the object to be hoisted is non-symmetrical, it is more difficult to calculate the tension in the slings. The load angle factor is still a simple calculation but the share of the load is more difficult. In the example below, the COG is closer to one lifting point than the other. The share of the load can be calculated as below.

The distance from the center of gravity to the opposite lifting point, divided by the overall distance between the lifting points, times the weight of the load.

EXHIBIT 3.E.023

Share of the Load Calculation Example

Vertical Force on Sling B:

104” / 144” = .722 or 72%

5 tons x 72% = 3.6 tons

Vertical Force on Sling A:

40” / 144” = .277 or 28%

5 tons x 28% = 1.4 tons

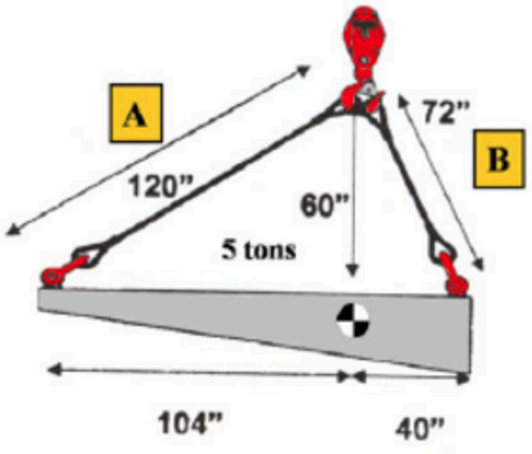

Since sling B is attached closer to the COG than sling A, sling B will have more load than A. The load angle factor for sling A is 2, and the load angle factor for sling B is 1.2. Again, the load angle factor is length divided by height.

To calculate the tension in the slings, apply the load angle factor to the share of the load as follows:

Sling A

1.4 tons x 2 = 2.8 tons

Sling B

3.6 tons x 1.2 = 4.32 tons

RIGGING HITCHES

There are three basic rigging hitches.

01 Straight
02 Choke
03 Basket

Straight Hitch

A straight hitch is any hitch where the pull or tension is applied directly in line from one point to another and the sling is not wrapped around the load.

EXHIBIT 3.E.024
Straight Hitch

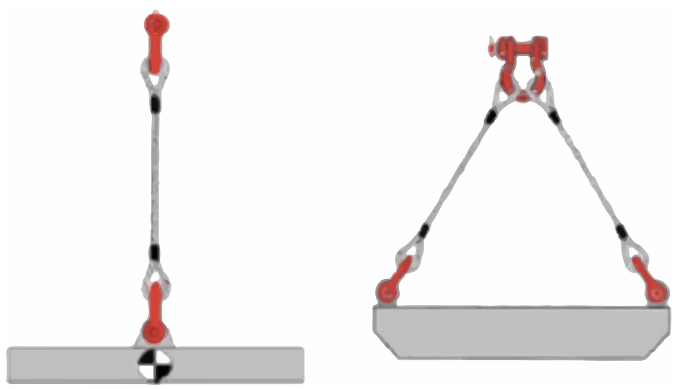

STRAIGHT

Choke Hitch

The choke hitch is the most versatile and widely used hitch. A choke hitch can be used when there isn't an attachment point on the load. The sling can be wrapped around the load and run back through an eye to secure the sling to the load. The choking action of the sling on the load helps keep the sling in place without slipping.

However, when lifting a load with only one sling in the choke hitch, the load can slide out and drop. Another thing to be aware of is when a choke hitch is used, the sling will lose about 25% of its straight hitch capacity. Further, if the hitch is tightened, more capacity is lost due to the mechanical forces input to the slings.

EXHIBIT 3.E.025
Choke Hitch

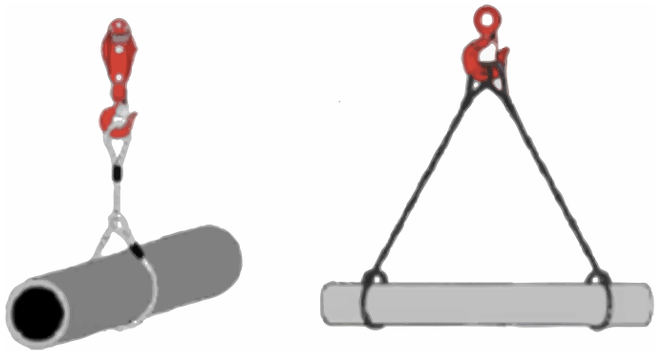

CHOKE

Basket Hitch

The basket hitch is likely the least used hitch. In many cases, the basket hitch provides the least amount of load control. If the basket is not secured on the load, it will likely move when the load is lifted.

Under certain conditions, basket hitches can double a sling's capacity. For that to happen, the sling must be wrapped around an object twenty times the diameter of the sling and the legs must be vertical.

EXHIBIT 3.E.026

Basket Hitch

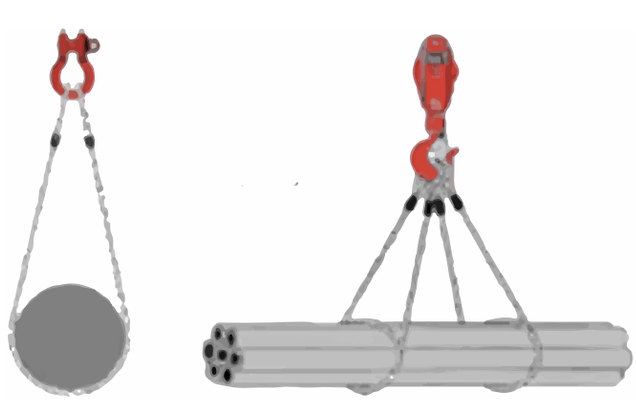

BASKET

CENTER OF GRAVITY

Finding the center of gravity (COG) can be difficult. For symmetrical shapes, the COG will be located relative to the middle of the object. For non-symmetrical shapes, the COG will likely be located away from the middle of the object.

Exhibit 3.E.027

Example of finding the COG on a non-symmetrical solid object

20,000 lbs. + 10,000 lbs. = 30,000 lbs.
20,000 lbs. / 30,000 lbs. = 66.6%
15' x 66.6% = 9.99'

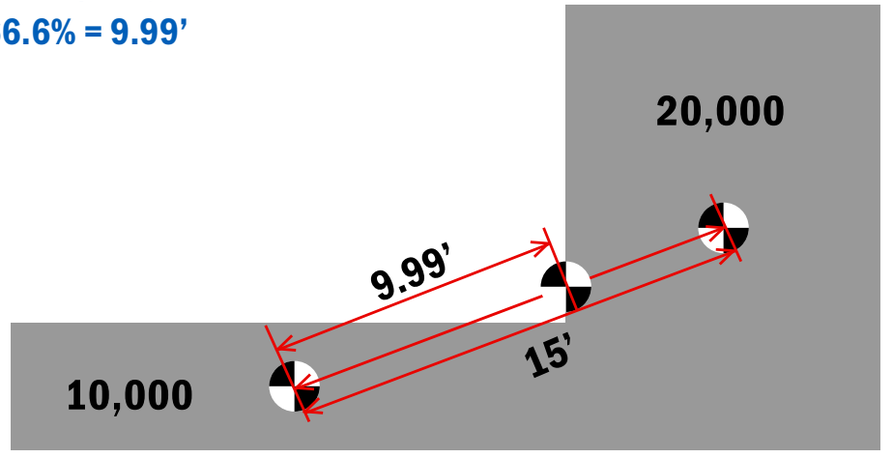

Knowing where the COG is located is important for the sizing of the rigging. It is also important because when a load is lifted, the COG will come directly below the hook of the crane. If the load is not initially rigged with the hook over the COG, the load will swing when hoisted which could cause damage to the crane, other equipment, ground personnel, or the structure being constructed.

Many times the COG will be marked on an object by the manufacturer. If it is not marked, it is possible to calculate the location. There are several methods of finding the COG. Refer to Bob's Rigging and Crane Handbook for methods of determining the location of the COG.

If the object is solid, the COG can be calculated using the following method. Break the object down into simple shapes and calculate the mass and weight of each object.

If the object is not solid, it may be necessary to perform trial lifts to determine the COG. For trial lift, the weight of the object must be known. The rigging used should be capable of supporting the entire weight of the load. This will ensure that the rigging is adequate for the trial lift.

One method of trial lifting is as follows.

Lift at point A and record the weight (VERT A).

Lift at point B and record the weight (VERT B).

Make sure the object is supported on the end for accuracy.

Distance (D) from Point A to Point B is D=10 feet

$$\text{COG from point A} = \frac{\text{VERT B}}{(\text{VERT A} + \text{VERT B})} \times D$$

VERT A = 500 lbs.
VERT B = 1,500 lbs.

$$\frac{1{,}500}{(500 + 1{,}500)} \times 10 = 7.5 \text{ feet}$$

Exhibit 3.E.028

Trial Lifting Method #1

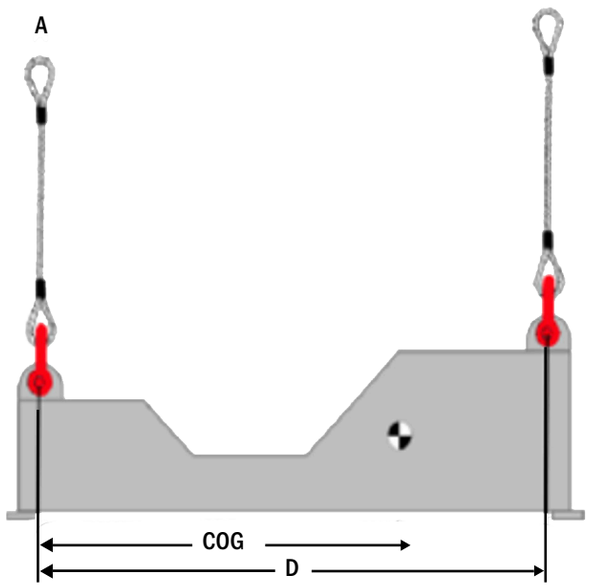

Another method of test lifting is as follows.

The weight of the lift must be known. Each sling and rigging device should have enough capacity to lift the entire weight of the load.

With equal length slings, lift the object clear of the ground. Use a plumb bob from the hook of the crane down to the load. Mark a vertical line on the object.

Set the load down and install a longer sling on the end that was highest during the previous test lift. Lift the object again and mark a vertical line on the object. The point where the two lines intersect is the center of gravity of the object.

Exhibit 3.E.029
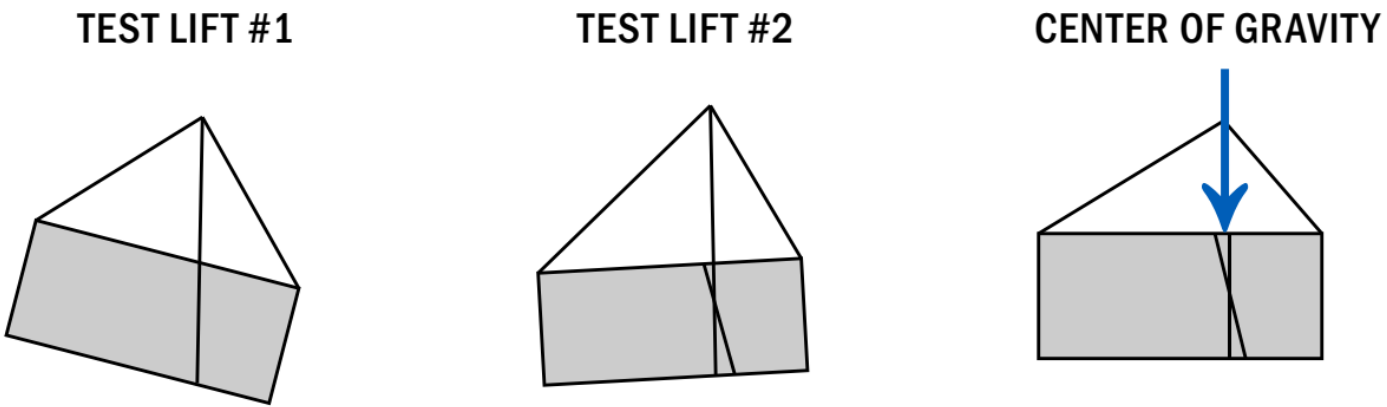
Trial Lifting Method #2